STELLRAM

1 What's the Application

A) Internal or External
B) Type of thread form
C) Material being machined

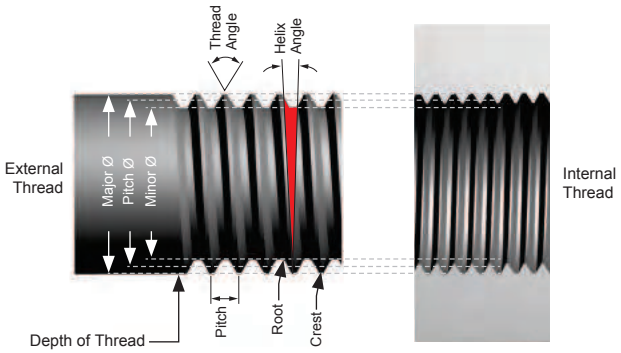

3 Select Tooling

F) External
G) Internal

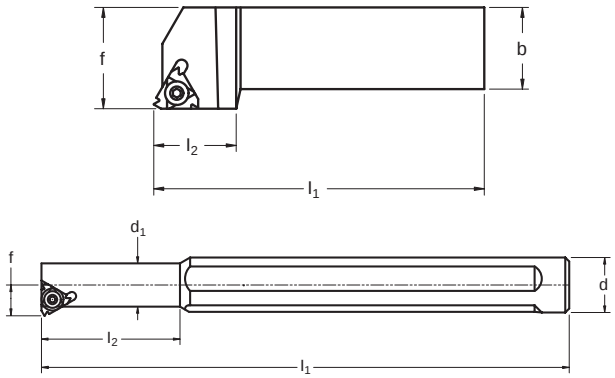

See pages C238 – C242

2 Machine Set-Up

D) LH or RH thread form
E) Machine Set-Up

Right Hand Thread / Right Hand Tooling

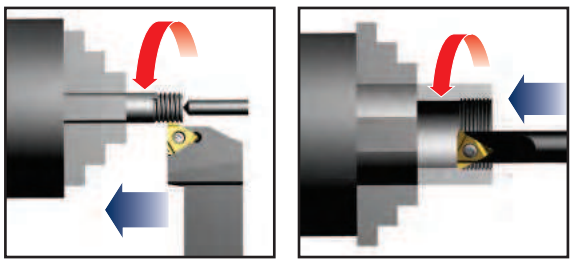

See page C248

4 Check Helix Angle

Note: The 1.5°

Calculation of thread helix angle for a given thread

$$\text{Helix angle - } \text{Tan}^{-1}\,\theta = \frac{\text{Lead of the Thread}}{\text{Pitch/Effective Diameter x } \pi}$$

Helix Angle Calculation (mm)

Outside Diameter mm	1	1,25	1,5	1,75
				Helix A
5	3° - 38'	4° - 33'	5° - 27'	-
6	3° - 2'	3° - 48'	4° - 33'	5° - 18'
8	2° - 17'	2° - 51'	3° - 25'	3° - 59'
10	1° - 49'	2° - 16'	2° - 44'	3° - 11'
12	1° - 31'	1° - 54'	2° - 17'	2° - 39'
14	1° - 18'	1° - 38'	1° - 57'	2° - 17'
16	1° - 8'	1° - 42'	1° - 42'	2° - 0'

See page C250